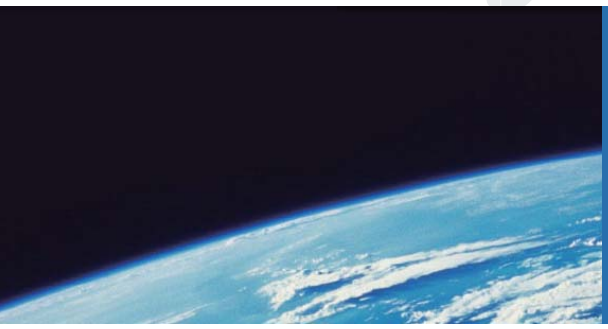

ITTEST

QUESTION & ANSWER

Guías de estudio precisos, Alta tasa de paso!

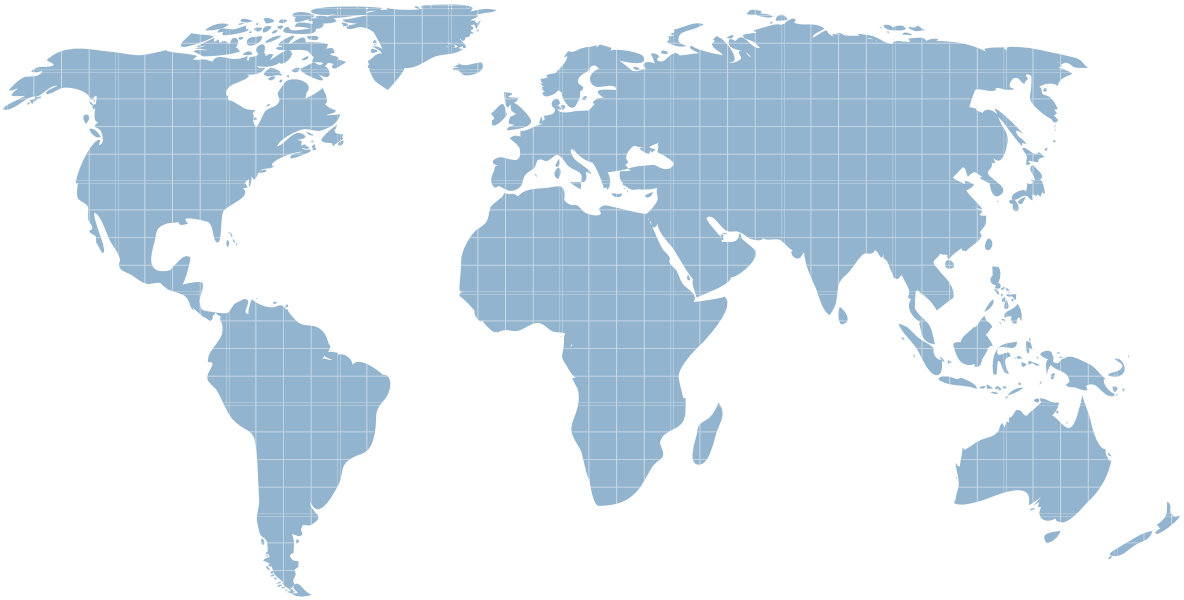

Ittest ofrece información actualizada de forma gratuita en un año!

http://www.ittest.es/

Exam : **250-406**

Title : Administration of Clearwell eDiscovery Platform 7.x

Version : Demo

1.What is purpose of the File Based Search in Symantec Clearwell eDiscovery Platform 7.x?
A. to run searches that cannot be run via the search UI due to term expansion limitations
B. to provide a way to export only the "Keywords" section data to a CSV file
C. a new way to produce tangible evidence of the Legal Hold notifications that have been created, their status, and the custodian actions
D. to place a "hold" on information in its current Enterprise Vault location without collecting or copying the data
Answer: C

2.The Symantec Clearwell eDiscovery Platform 7.x should use separate Confirmation and Admin servers for the Legal Hold module for which two reasons? (Select two.)
A. to avoid a disparity in the number of custodians allocated for the Legal Hold and Collections modules
B. to provide a secure Legal Hold environment
C. to use a separate Confirmation and Admin server as required by the Legal Hold module
D. to minimize processing interruptions of either the Confirmation or Admin server
E. to meet Clearwell System Requirements that the Confirmation server uses a different OS than the Admin server
Answer: B,D

3.A Case Team receives an email indicating that ongoing updates will be added to each employee profile in a Windows domain that is of particular interest to custodian data in the Symantec Clearwell eDiscovery Platform 7.x.
What should the Case Team implement in the Symantec Clearwell eDiscovery Platform 7.x to ensure that each custodian profile is updated when the new field is added?
A. Scheduled Backup
B. Scheduled Active Directory Discovery
C. Scheduled Bulk Source Import
D. LDAP Configuration Tester
Answer: B

4.A System Manager needs to import custodians from the Employee List area using the Import All from Active Directory menu option. The System Manager receives the message "No Active Directory users to import."
Which task needs to be performed for the import to work successfully?
A. run Active Directory discovery from All Collections Sources area
B. run Active Directory discovery from Email Servers page in System area
C. add Active Directory Domain to crawl as source on the Settings page
D. add Active Directory global catalog server as source first on the Settings page
Answer: B

5.The mail server used by the Symantec Clearwell eDiscovery Platform 7.x has been changed to a new server during an organization's Exchange migration. New hold notices are now failing.
Which configuration changes should be made in the system area?
A. in the Email Servers page, update SMTP Server host name

B. in the General page, update SMTP Server host name
C. in the General page, update Confirmation Server host name
D. in the General page, update Admin Server host name
Answer: B

6.A legal department asks the Case Team to add a survey question to an existing survey.
How should the Case Team proceed?
A. create a new Custodian Notice with the new survey question and send it to custodians
B. edit an existing Custodian Notice and add question to the existing notice
C. create a System Admin notice with the new survey question and send it to custodians
D. delete the existing notice, create a new notice, and send it to custodians
Answer: A

7.A Case Team needs to find all emails sent from Joe Chen to Jun Lee. The search should be formulated to return messages that were sent from Joe Chen directly to Jun Lee, or when Jun Lee was cc'd or bcc'd. If available, the Case Team wants to leave the default setting to search contained senders/recipients.
Which search method should the Case Team use?
A. use a Participants search, search emails From participant Joe Chen and To participant Jun Lee
B. search and return all documents, and select Joe Chen from the Sender filter and Jun Lee from the Recipient filter
C. use a Keywords search, search for participants Joe Chen AND Jun Lee, and under "Fields to search" select "Senders and Recipients"
D. use a Participants search, search emails from participant Joe Chen and with participant Jun Lee as recipient
Answer: D

8.A Case Team needs to search for all items that include the word "jasmin" because it refers to a project that is under investigation. The Case Team also wants to include variations such as "jasmen," "jasmine," and "jasminum". In addition to running the search now, the search will be saved and run after additional data has been added. Stemming is enabled for this case.
Which search syntax or functionality should be used?
A. jasmin
B. jasm*
C. jasm?
D. jasm???
Answer: B

9.A Case Team is using Languages in Advanced Search to identify all documents that (1) contain mostly Spanish language (60 percent or more), and (2) contain some English language. The language predominance threshold for this case was set to 60 percent. How should this search be formulated?
A. Select "Must Contain All of These" for Spanish and "Must Contain At Least One of These" for English.
B. Select "Must Contain All of These" for both Spanish (predominant) and English.
C. Select "Must Contain All of These" for both Spanish and English.
D. Select "Must Contain All of These" for Spanish and English and "Must Not Contain Any of These" for

English (predominant).
Answer: B

10.A Case User needs to run a search with 20 terms. The Case User has the option of including these terms on one line or placing each of the 20 terms on a separate query row.
What are two advantages of placing the terms on separate query rows? (Select two.)
A. The user can create a saved search and choose to Highlight Terms if the terms are on separate query rows.
B. The user can view the terms' stemmed variations if the terms are on separate query rows.
C. The user can create a search report that includes more specific details about each search term.
D. The user can use Search Filters to view the list of words and corresponding documents hit.
E. The user can de-select stemming for each term if the terms are on separate query rows.
Answer: C,D

11.During an early case assessment, it appears that emails of interest are using code words. The terms "Red Dog," "Black Cat," and "Green Parrot" appear often in the emails. However, if the word "pet" appears, the message is irrelevant.
Which syntax will search for any of the phrases mentioned without the word "pet"?
A. ("Red Dog" OR "Black Cat" OR "Green Parrot") NOT pet
B. ("Red Dog" or "Black Cat" or "Green Parrot") not pet
C. ("Red Dog" OR "Black Cat" OR "Green Parrot") W/O pet
D. ("Red Dog" or "Black Cat" or "Green Parrot") w/o pet
Answer: A

12.Which two Symantec Clearwell eDiscovery Platform 7.x properties must be modified to collect data from Symantec Enterprise Vault? (Select two.)
A. esa.icp.collection.ev.index_level
B. esa.icp.collection.ev.content.defaultRetrieveTimeoutSecs
C. esa.common.db.dbname
D. esa.threader.ITD.distribution.enabled
E. esa.ic.ev.collection.max_outstanding_pending_batches
Answer: B,E

13.Symantec Clearwell eDiscovery Platform 7.x needs to run with an account that has read permissions for the archives in Symantec Enterprise Vault.
Which service should have credentials changed to enable this?
A. EsaPstCrawlerService
B. EsaApplicationService
C. EsaEvCrawlerService
D. EsaEvRetrieverService
Answer: C

14.A customer requests that all data for a specific custodian in a Symantec Enterprise Vault mailbox archive be collected and put on hold within Symantec Enterprise Vault. Since the matter is ongoing, all

existing and new data must be collected and placed on hold.
Which two tasks should be performed to collect from and apply hold within Symantec Enterprise Vault? (Select two.)
A. create a scheduled collection task
B. create a scheduled hold task using the same search criteria as a collection task
C. create a scheduled hold task
D. create a collection task
E. create a hold task
Answer: A,B

15.Refer to the exhibit.

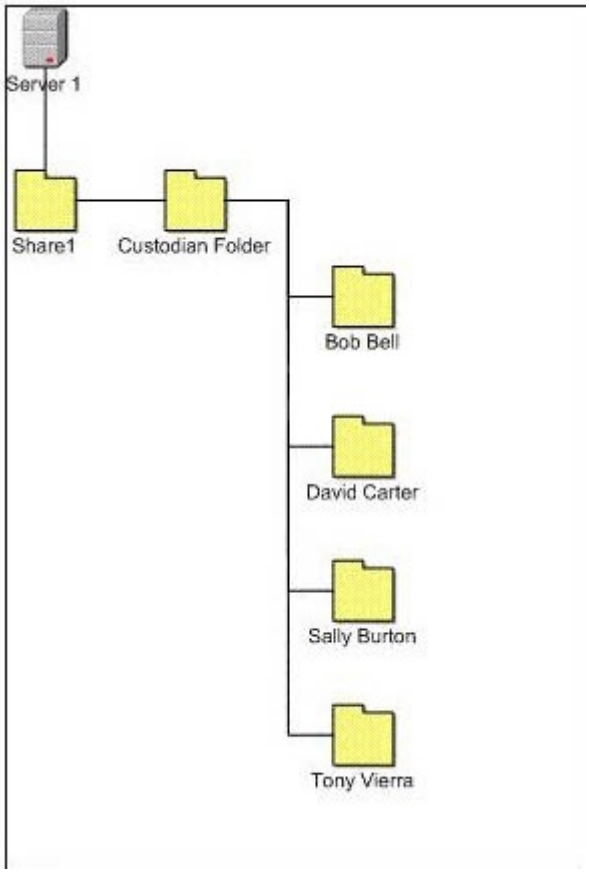

A Symantec Clearwell eDiscovery Platform 7.x System Manager needs to collect data from a file share that includes previously collected and stored custodian data. During the collection, the System Manager must assign the correct custodian to the data. The exhibit displays the Directory structure for the stored data.
Which value should be placed in the custodian path in the collection properties to ensure that the folder named after each custodian is used as the custodian assignment?
A. 2
B. 3
C. 4
D. 5
Answer: C

16.A System Manager needs to collect from Symantec Enterprise Vault but is permitted to perform the collection only between 9 p.m. in the evening and 1 a.m. in the morning; however, the amount of data that must be collected will require more than the allotted 4 hours.
Which steps are required to ensure that all of the necessary data is collected using a single collection task?
A. Create two or more collection tasks against the same source.
B. Create a single collection task.
C. Create a single scheduled collection task. Set the schedule to start at 09:00 p.m., end at 01:00 a.m., and set the task to repeat.
D. Create a single scheduled collection task. Set a schedule to start at 21:00, end at 01:00, and set the task to repeat.
Answer: D

17.Which metadata filters are available for collecting from Microsoft Exchange?
A. received date
B. sent date
C. modified date
D. creation date
Answer: B

18.A new data source has been added to the Symantec Clearwell eDiscovery Platform 7.x and has completed pre-processing without exceptions. No additional data has been added to the source since the completion of pre-processing. The Case Team needs all data in the source indexed for the case.
Which steps are required when processing the data source?
A. select the source and configure processing options using the property browser
B. select the source, apply the necessary date range filter, and process with or without discovery
C. select the source and configure the processing filters at the source level
D. select the source and process with or without discovery
Answer: D

19.An organization plans to switch from Microsoft Exchange to an Open Source mail platform. The organization will replace Outlook on all user machines with a new mail program that stores messages in the MBOX format.
Which workflow should the System Manager implement to properly process email from the new system?
A. collect the mail and leave it in its MBOX format, as Clearwell can process mail in the MBOX format
B. collect the mail, leave it in its MBOX format, and have it converted to Outlook (PST) by a third party before processing in Clearwell
C. employ a third-party software solution to convert the MBOX files to Outlook (PST), then process the converted files in Clearwell
D. collect the mail and prepare to review it in its native format, then convert only responsive messages to Outlook (PST) for processing in Clearwell
Answer: A

20.An organization needs OCR run against a set of TIFF image files as part of a larger data load. How

should this be accomplished?
A. OCR should be configured to run during initial indexing with all image file types selected.
B. OCR should be configured to run during initial indexing with only TIFF image file types selected.
C. OCR should be turned off during initial indexing and then run against a search result set of all documents with indexed text.
D. OCR should be turned off during initial indexing and then run against a search result set of the TIFF images.
Answer: D