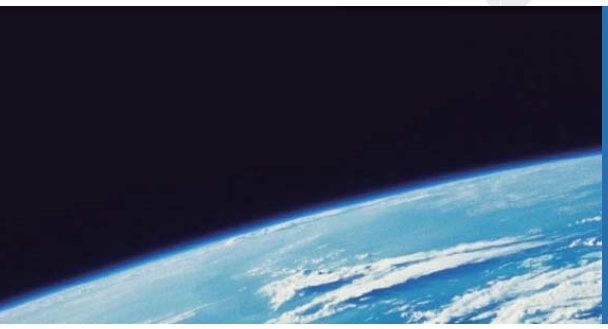

ITTEST

QUESTION & ANSWER

Guías de estudio precisos, Alta tasa de paso!

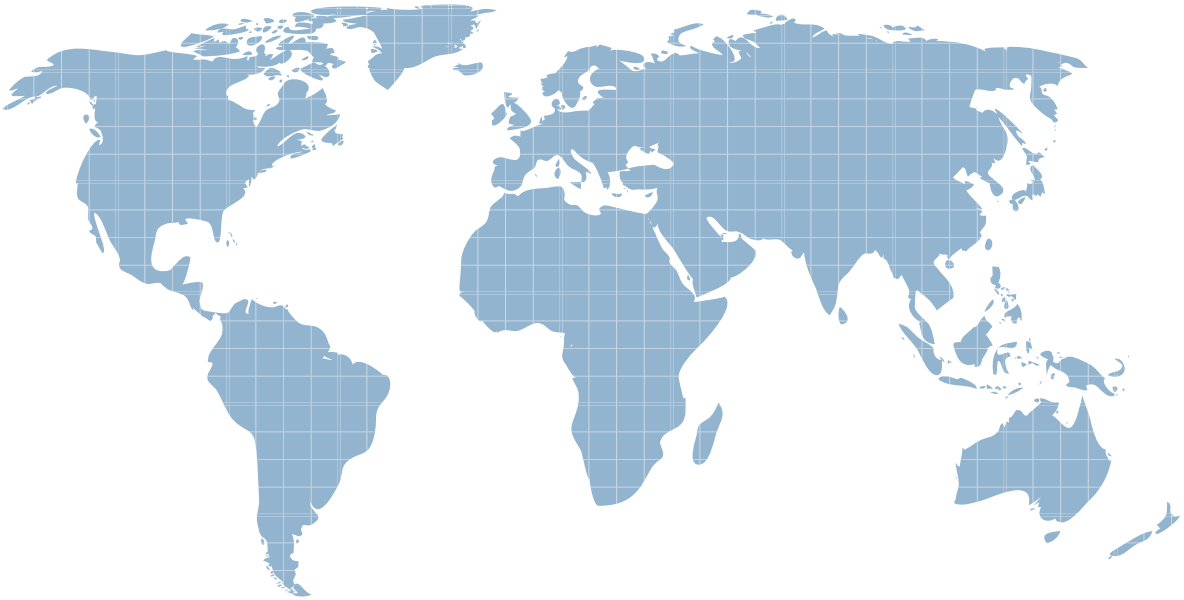

Ittest ofrece información actualizada de forma gratuita en un año!

http://www.ittest.es/

Exam : **920-463**

Title : Ethernet Switching Design Expert

Version : DEMO

1. A customer is designing a new high availability network and has decided to install a pair of Ethernet Routing Switch 8600s in a hot standby VRRP configuration. Router 1 will be the Master and will have an IP address of 192.168.10.1. Router 2 will be the slave with an IP address of 192.168.10.2. The virtual router's IP address will be 192.168.10.3. What should be the default gateway when configuring the network settings on all Microsoft Windows workstations at this location?

A. 192.168.10.0

B. 192.168.10.1

C. 192.168.10.2

D. 192.168.10.3
Answer: D

2. Click the Exhibit button. A customer has a stack of Ethernet Switch 460s connected to its two core switches (Ethernet Routing Switch 8600s). These Ethernet Switch edge switches are used to aggregate workstations and other devices delivering mission critical data to the network core. Which configuration should you recommend to ensure fast failure recovery while maximizing the available bandwidth?

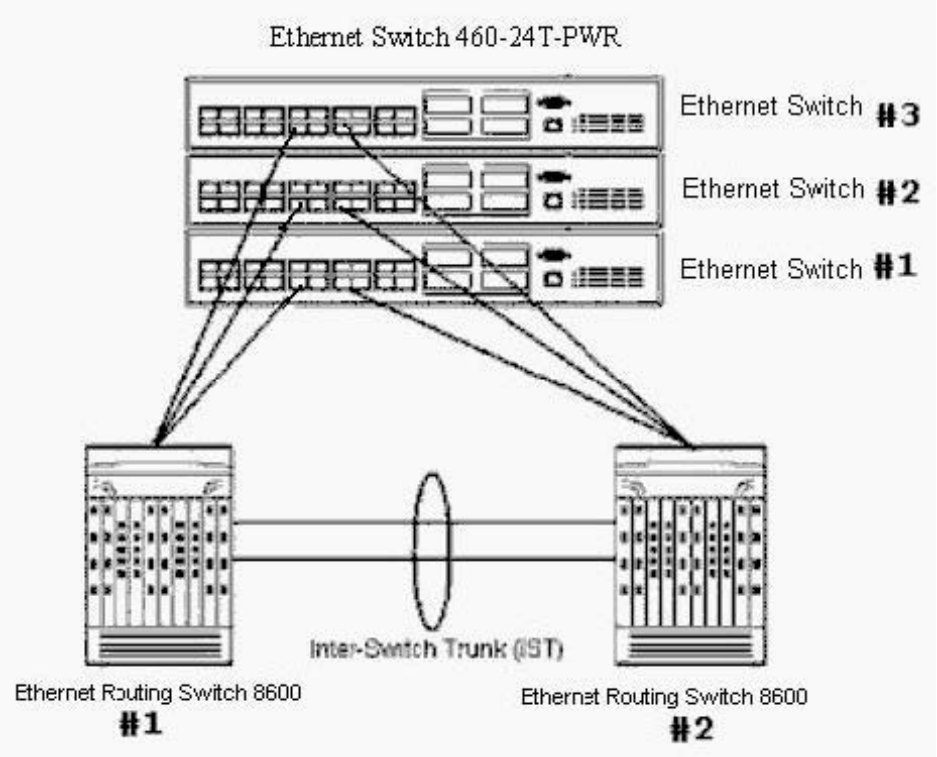

A. 1) Disable the Spanning Tree Protocol (STP) on the edge aggregation ports to avoid network looping. 2) Enable STP on core uplink ports to avoid blocking links. 3) Enable IEEE 802.1q tagging on uplink ports.

B. 1) Configure Distributed MLT (DMLT) on the edge switches and enable SMLT at the core. 2) Enable IEEE 802.1q tagging on the MLT ports and enable Virtual Router Redundancy Protocol (VRRP) at the core.

C. 1) Configure the edge switches into three separate VLANs. 2) Configure Multi-Link Trunking (MLT) on each of the edge switches and Split Multi-Link Trunking (SMLT) on the core switches. 3) Enable IEEE 802.1q tagging on the MLT ports.

D. 1) Configure the edge switches into three separate VLANs. 2) Ensure that each VLAN has its own Spanning Tree Group (STG). 3) Make Ethernet Routing Switch 8600-1 the primary link for Ethernet Switch #1 and #3, and make Ethernet Routing Switch 8600-2 the primary link for Ethernet Switch #2. 4) Enable Virtual Router Redundancy Protocol (VRRP) backup-master on the core switches.
Answer: B

3. While defining your client's IST VLAN between the pair of Ethernet Routing Switch 8600s, you have chosen IP subnet addresses from a valid address set. Is it necessary to enable a routing protocol on the IST VLAN IP interface?

A. A routing protocol may be used, but it is not necessary.

B. When grouping Inter Switch Trunks into a VLAN, a routing protocol must always be used.

C. In order for the Split Multi-Link Trunking (SMLT) switches to detect a failure, a routing protocol must not be enabled.

D. As the number of Inter Switch Trunks grouped into the VLAN increases, the requirement for routing protocol becomes more apparent.
Answer:A

4. Your customer's dual-homed Routed Split Multi-Link Trunking (RSMLT) network, using two Ethernet Routing Switch 8600s, requires additional edge switches to accommodate growth. Their 100 existing ports must grow to 180 total active ports. Existing records show that IEEE 802.3ad Link Aggregation Control Protocol (LACP) is used throughout the network. As you develop this customer's design, which requirement becomes apparent?

A. Only 128 attached devices are supported by an SMLT dual-homed solution.

B. LACP functions reliably with Split Multi-Link Trunking (SMLT) single port configurations only.

C. Distributed MLT (DMLT) links are required to support LACP on the Ethernet Routing Switch 8600.

D. The edge switches need not possess any SMLT intelligence but must be able to perform link aggregation.
Answer: D

5. What is the most valuable benefit of using Routed Split Multi-Link Trunking (RSMLT) in a network design?

A. The ability to eliminate network loops.

B. It enables network servers to be dual-homed.

C. The network can be configured to use the most efficient path.

D. It provides sub-second failover in the routed part of the network.
Answer: D

6. Click the Exhibit button. Wiring closet switches A, B, C and D are connected to the aggregation switches E and F. In order for wiring closet switches A and D to gain the Split Multi-Link Trunking (SMLT) benefits of switch A, B and C, what must be done?

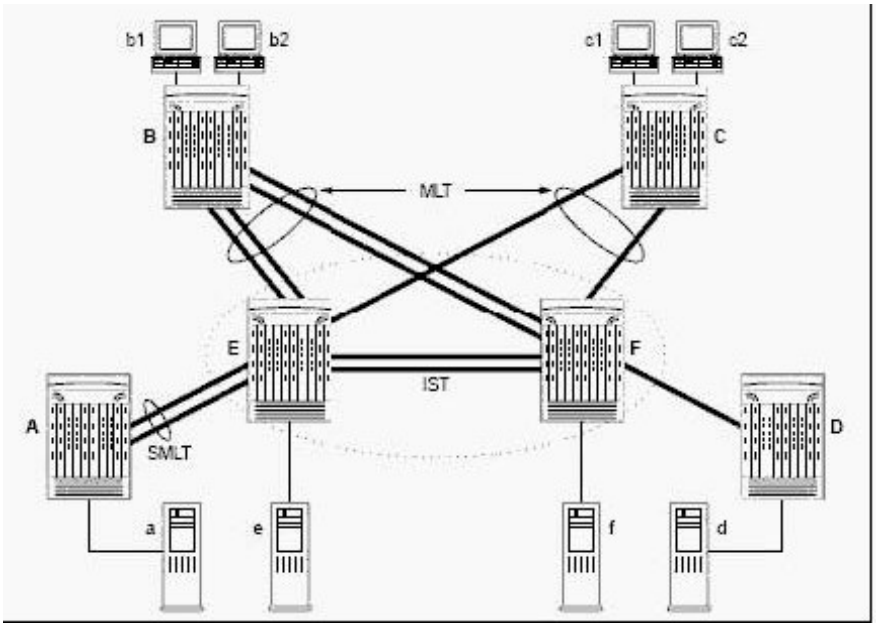

A. Switch A and D are configured correctly, no changes are required.

B. Configure switches A and D to terminate across switches B and C using SMLT.

C. Switches A and D must be terminated to both switches E and F, to gain the benefits of SMLT.

D. Terminate an additional connection from switch D to aggregation switch F and configure the connections in a MLT as with switch A.
Answer: C

7. A financial institution has completed an expansion to its building to accommodate a payment processing group. A new wiring closet containing a stack of eight Ethernet Switch 470-24Ts has two diverse route connections each consisting of multiple pairs of fiber back to the core consisting of a pair of

Ethernet Routing Switch 8600s configured for both VRRP load balancing and Split Multi-Link Trunking (SMLT). To provide the maximum resiliency for the new group, how should the trunks from the closet to the core be bundled?

A. Create four stacks of two Ethernet Switch 470s and build four DMLTs.

B. Include one port from the top and bottom Ethernet Switch 470s into a DMLT to the core.

C. Create two Distributed Multi-Link Trunks (DMLT) and separate them over the diverse routes to the core.

D. Enable Spanning Tree and include a single port from each Ethernet Switch 470 and connect back to the core.
Answer: C

8. Click the Exhibit button. The exhibit shows a pair of Ethernet Routing Switch 8600s Split Multi-Link Trunking (SMLT) aggregation switches A and B interconnected with Inter-Switch Trunks (IST). What special consideration must be given to the IST ports to include these trunks in VLAN 109 with the MLT connections from switch C?

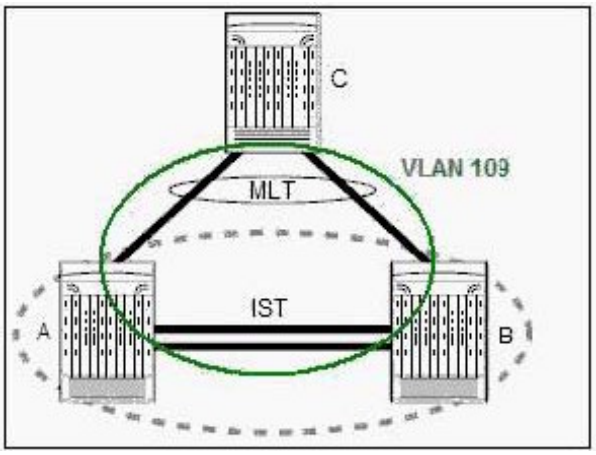

A. None, just include the IST ports as members of the VLAN.

B. You should use an independent VLAN for the IST peer session.

C. It is recommended that an independent VLAN be used for any single MLT group.

D. It is not recommended that an IST peer session or any MLT group should ever be arranged in a VLAN.
Answer: B

9. You have built a network plan for a new customer. Your plan includes a Split Multi-Link Trunking (SMLT) aggregation pair of switches interconnected with IST trunks. This customer is familiar with STP and would like you to explain how network convergence times compare with SMLT. Which statement is true?

A. STP is not affected by network convergence, so any comparison is unrealistic.

B. SMLT is not affected by network convergence, so any comparison is unrealistic.

C. STP and SMLT offer comparable network convergence times because the protocol used in each case is very similar.

D. The aggregation pair is directly connected by IST trunks so there is little network convergence delay as compared to STP's network protocol which can span multiple switches.
Answer: D

10. Click the Exhibit button. A local university has been experiencing an increased demand for bandwidth as voice, video, and data applications converge on their network. To deal with this increased demand, Ethernet switches should be deployed at the edge to deliver Fast Ethernet to the desktop and Gigabit links to the core, and to replace the existing core legacy switches with Ethernet Routing Switch 8600s. The Ethernet Switches will be dual-homed to the new Ethernet Routing Switch 8600s. How should you configure Split Multi-Link Trunking (SMLT) for the greatest benefit in terms of load-sharing, fast convergence, and resiliency?

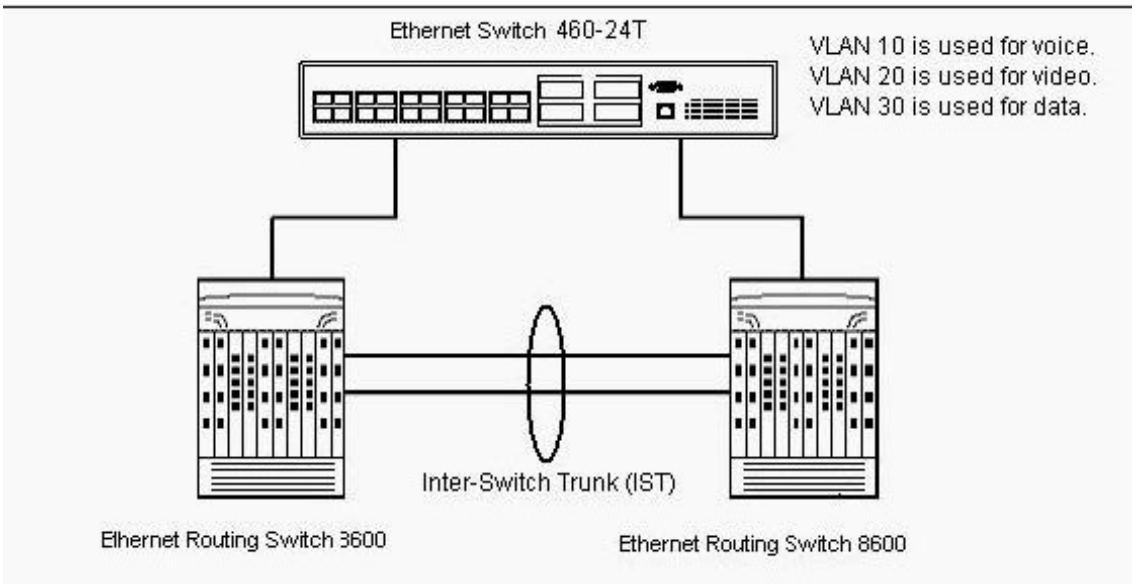

A. Configure MLT on the Ethernet Switch 460 and SMLT on the Ethernet Routing Switch 8600s, and tag all VLANs over these links.

B. Configure SMLT on the Ethernet Switch 460 and Routed Split Multi-Link Trunking (RSMLT) on the Ethernet Routing Switch 8600s, and tag all VLANs over these links.

C. 1) Configure SMLT on all switches and use the Spanning Tree Protocol (STP) to prevent network looping. 2) Each VLAN should have its own Spanning Tree Group (STG). 3) Make the primary path for VLAN 10 and 20 the link between the Ethernet Switch 460 and the Ethernet Routing Switch 8600-1 and the primary path for VLAN 30 the link between the Ethernet Switch 460 and the Ethernet Routing Switch 8600-2.

D. 1) Configure RSMLT on the Ethernet Switch 460 and SMLT on the Ethernet Routing Switch 8600, and use STP to prevent network looping. 2) Each VLAN should have its own Spanning Tree Groups (STG).

3) Make the primary path for VLAN 10 and 20 the link between the Ethernet Switch 460 and the Ethernet Routing Switch 8600-1 and the primary path for VLAN 30 the link between the Ethernet Switch 460 and the Ethernet Routing Switch 8600-2.
Answer:A