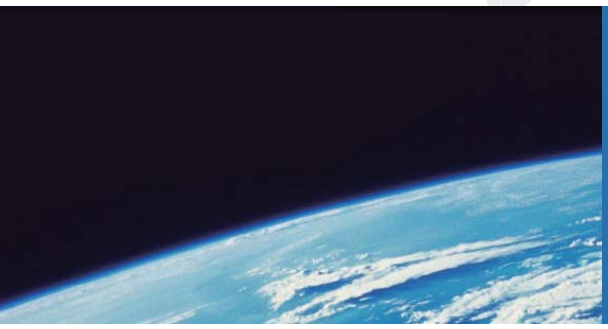

ITTEST

QUESTION & ANSWER

Guías de estudio precisos, Alta tasa de paso!

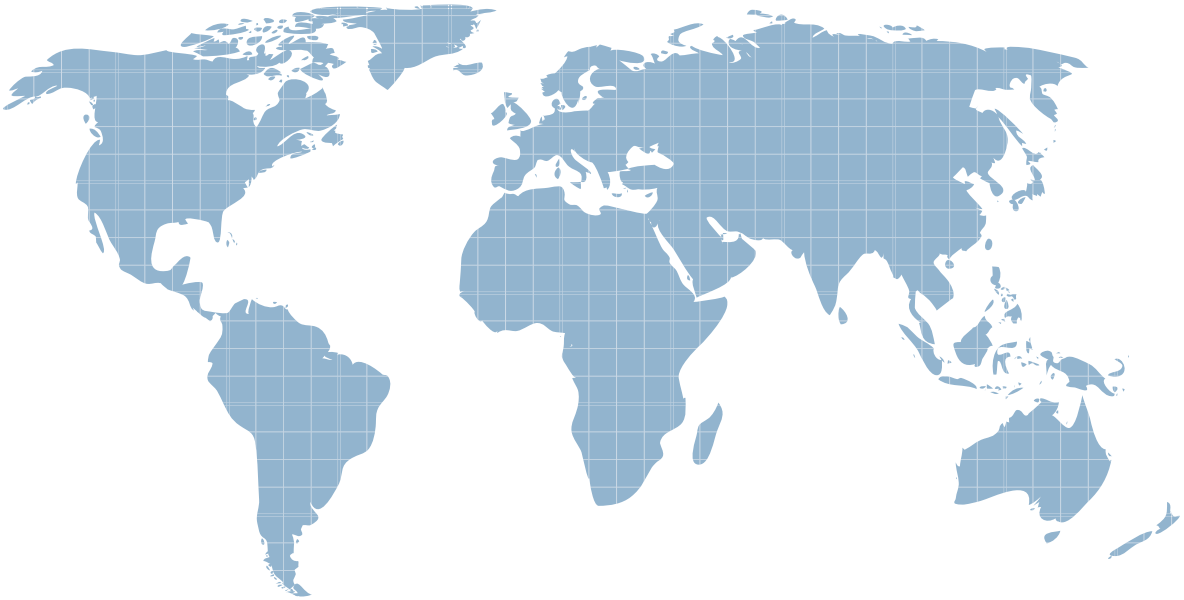

Ittest ofrece información actualizada de forma gratuita en un año!

http://www.ittest.es/

Exam : **FN0-125**

Title : Foundry Networks Certified Network Engineer (FNCNE)

Version : DEMO

1. On a ServerIron XL configured for firewall load balancing, the packet are load balanced using:

A. The firewall path

B. The session tables traded by the XLs

C. The MAC address set in the ServerIron

D. The hash value derived from the source and destination IP addresses

Answer: D

2. Firewalls can be assigned to which group?

A. 1

B. 2

C. 3

D. 4

E. 5

Answer: B

3. The firewall path describes the path

A. To the next firewall

B. For the health check

C. To the firewall partners

D. To the ServerIron on the other side of the firewall

Answer: B

4. What is the maximum hop count allowed by RIP?

A. 15

B. 10

C. 255

D. no limit

Answer: A

5. What transport layer protocol provides a connection oriented service?

A. UDP

B. STP

C. TCP

D. ARP

Answer: C

6. Which of the following ranges are defined as well-known port numbers?

A. 0-255

B. 1-256

C. 1-1023

D. 1-2048

Answer: C

7. What is the difference between TACACS+ and TACACS?

A. TACACS is an enhancement to TACACS+

B. TACACS is TCP based and TACACS+ is UDP based

C. TACACS+ provides encryption and uses TCP.

D. TACACS+ provides encryption and uses UDP.

Answer: C

8. The diagram shows an OSPF network with no designated router (DR) and no backup designated router (BDR). Which of the following statements identifiy which routers will be selected DR and BDR?

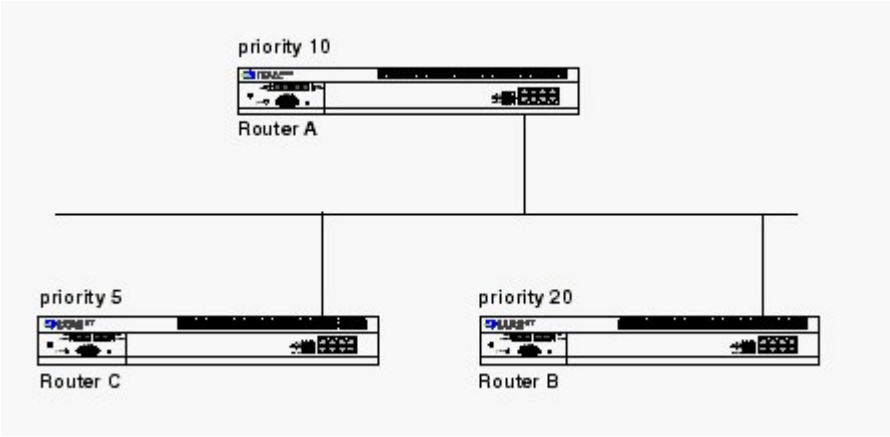

A. Router C is DR, Router B is BDR

B. Router B is DR, Router A is BDR

C. Router B is BDR, Router A is DR

D. Router A is DR, Router C is BDR

Answer: B

9. Switch sw-FWS2 (see diagram) is running 802.1w (RSTP), with default settings. It has a crossover cable between ports e38 and e48. Select the combination of port titles that match the ports.

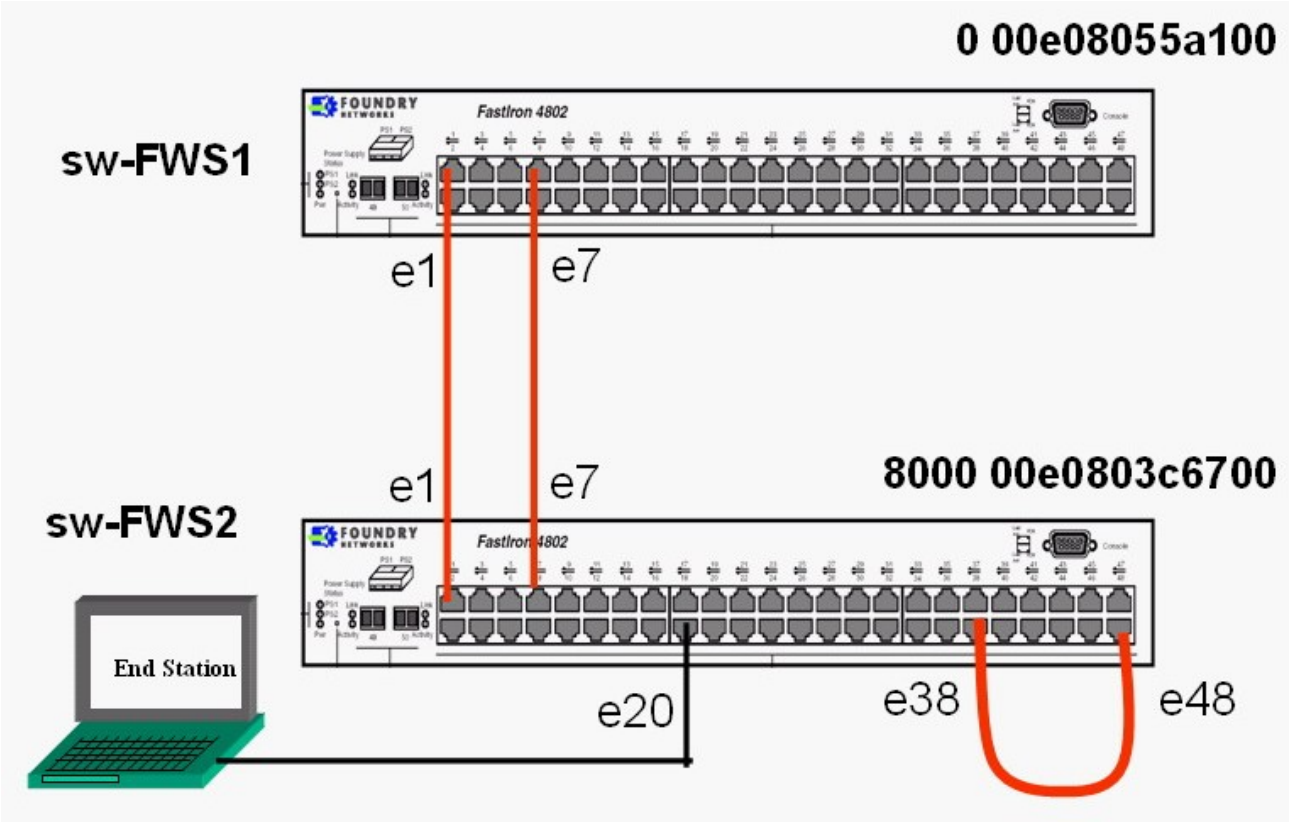

A. e38: Root Port e48: Alternate Port

B. e38: Designated Port e48: Designated Port

C. e38: Alternate Port e48: Root Port

D. e38: Backup Port e48: Designated Port

E. e38: Designated Port e48: Backup Port.

Answer: E

10. In the diagram, ports e1 and e7 of sw-FWS1 have RSTP port titles assigned. Select the combination of port titles that match the ports.

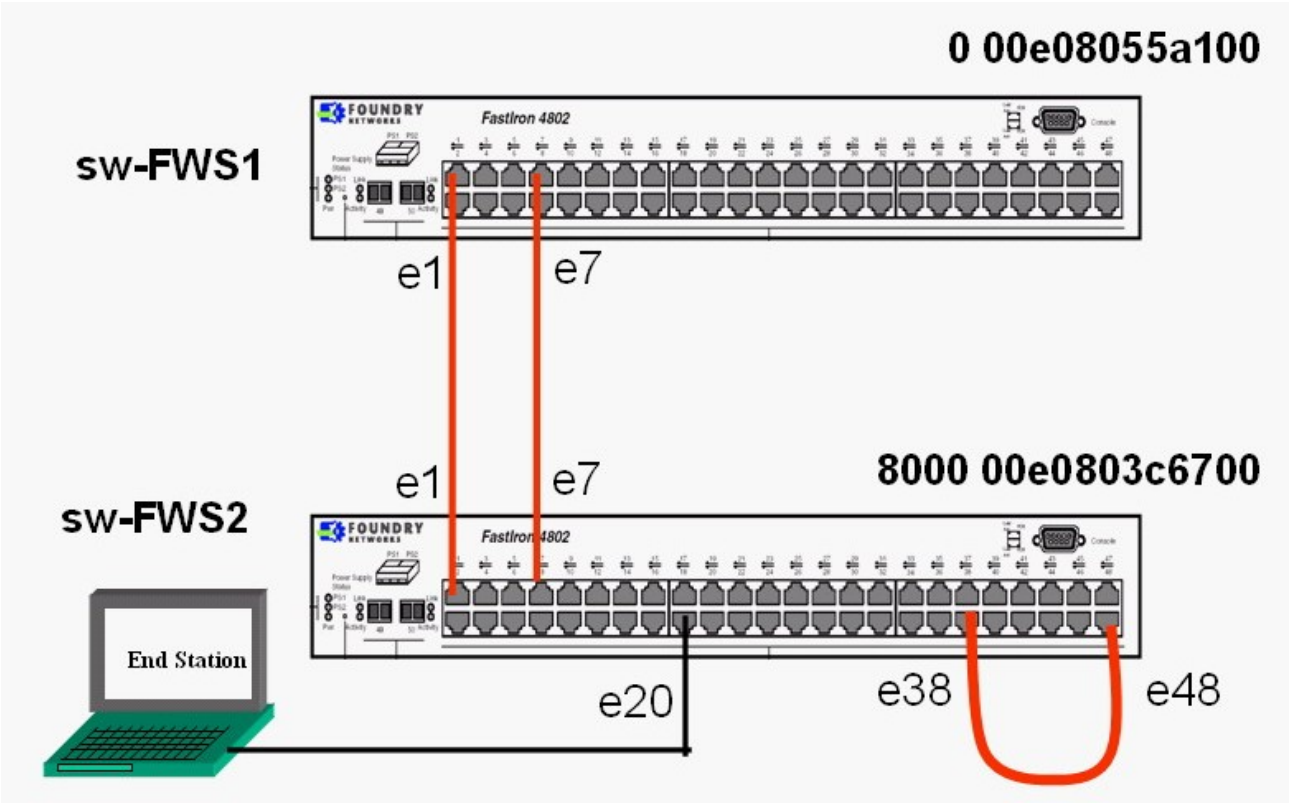

A. e1: Root Port e7: Alternate Port

B. e1: Designated Port e7: Designated Port

C. e1: Alternate Port e7: Root Port

D. e1: Backup Port e7: Designated Port

E. e1: Designated Port e7: Backup Port.

Answer: B

11. After Bridge elections have finished, in which 802.1d state will a Non-designated port remain?

A. Learning

B. Listening

C. Discarding

D. Blocking

Answer: D

12. Which RMON group provides samplings of packet and error statistics captured at regular intervals?

A. events

B. alarms

C. statistics

D. history

Answer: D

13. Which of the following are true statements regarding a Topology Group? (Select all that applies)

A. It is used to add a tagged port to many VLANs with one configuration line.

B. It uses a common STP instance across member VLANs that is controlled by a master VLAN.

C. All of the VLANs that are part of the group in a switch configured with this feature must have matching tagged ports.

D. It can be the single configuration point for defining L2 paths in networks using STP, RSTP, MRP or VSRP protocols.

Answer: BD

14. What routing algorithm is used by RIP?

A. distance vector

B. routing information

C. link state

D. dynamic routing

Answer: A

15. Of the following 802.1w (RSTP) port titles, which ones identify a port that is FORWARDING traffic? (Select all that applies)

A. Root Port

B. Designated Port

C. Alternate Port

D. Backup Port

E. Edge Port

Answer: ABE

16. Select all of the following statements that apply to a VLAN Group. (Select all that applies)

A. It is used to add a tagged port to many VLANs with one configuration line.

B. It uses a common STP instance across member VLANs that is controlled by a master VLAN.

C. All of the VLANs that are part of the group in a switch configured with this feature must have matching tagged ports.

D. It can be the single configuration point for defining L2 paths in networks using STP, RSTP, MRP or VSRP protocols.

Answer: AC

17. What is the valid extended ACL ID range?

A. 100-200

B. 100-199

C. 0-99

D. 1-99

Answer: B

18. Which routing solution prevents loop problems by sending a maximum hop count when a link goes down?

A. Split horizon

B. Poison reverse

C. STP

D. OSPF

Answer: B

19. Which 802.1d state will a switches Root Port and Designated Port enter after the 2 nd expiration of the forwarding-delay timer.

A. Learning

B. Listening

C. Forwarding

D. Blocking

Answer: C

20. What is the purpose of the STP listening state?

A. Listening to BPDUs to ensure there are no loops in the network.

B. Building a forwarding table.

C. Listening and learning Mac addresses.

D. Listening and building a filter table.

Answer: A